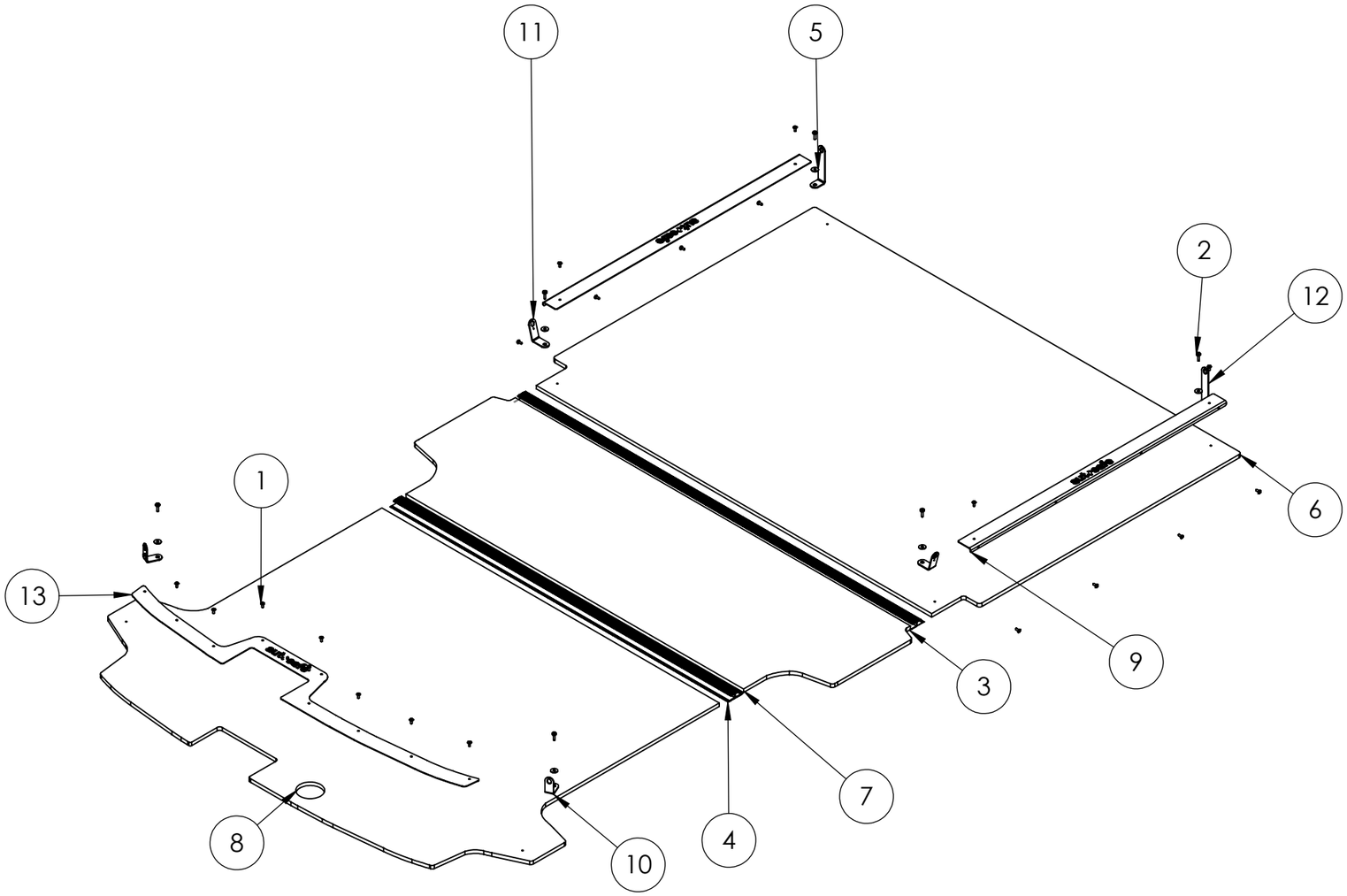

ITEM NO.	Part Number	DESCRIPTION	QTY.
1	10X12ZPPCRST	10g x 1/2 Zinc Pan Phillips Self Tapper	21
2	14g5/8x14		6
3	Floor Joiner Extrusion 1545	Aluminium Extrusion	1
4	Floor Joiner Extrusion 1320mm	Aluminium Extrusion	1
5	M6 Washer Small	M6 Washer Small	6
6	PTKT-FT15LWBFRT	Ford Transit Customer LWB Front	1
7	PTKT-FT15LWBMID	Ford Transit Custom LWB MID	1
8	PTKT-FT15LWBRR	Ford Transit Custom LWB Rear	1
9	PTKT-SC1000	Step Cap 1000	2
10	PTKTFFTCSWBB01	Floor Bracket 01	2
11	PTKTFFTCSWBB02	Floor Bracket 02	2
12	PTKTFFTCSWBB04	Floor Bracket 04	2
13	PTKTFTCSWBSC	Rear Step Cap	1

UNLESS NOTED OTHERWISE DIMENSIONS IN MILLIMETRES

autosafe
Driven by Innovation

DO NOT SCALE

PROPRIETARY AND CONFIDENTIAL
THE INFORMATION CONTAINED WITHIN THIS DRAWING IS THE SOLE PROPERTY OF AUTOSAFE. ANY REPRODUCTION IN PART OR AS A WHOLE WITHOUT THE WRITTEN PERMISSION OF AUTOSAFE IS PROHIBITED

Project:

DRAWING APPROVAL

Snr.Management:

OPERATIONS:

Date: 14/09/2022

Print Date:

Part No:PTKT-FFTCLWB-KIT

Material:

Thickness:

Status:

Scale: SCALE:1:25

Sheet Size: A3

Finish:

Vehicle:

Sheet No. SHEET 1 OF 1

AS1100

Description:

Drawn By: